RADO 200

Code: MA-SA-06



Physical

Jumping

Social-emotional

Socialisation

Description

Round trampoline intended for use on playgrounds with intensive use. Jumping mat is made of very durable Hercules lamellas with a width of min. 37 mm, having the shape of the letter "V" and reinforced by ribs. Thanks to the unique shape of the lamellas, the spaces between the mat elements have been reduced to only 7 mm, which prevents small objects, such as keys or mobile phones, from falling into the trampoline. The mat is available in 8 colours, it is also possible to make graphics on the mat. The rubber trampoline collar is available in 2 standard colours and 23 special colours. Additionally, a decorative pattern can be made on the collar. The trampoline can be equipped with openable cover that makes it easy to clean inside.

Warranty for trampolines covers 25 years for metal box and 3 years for lamellas.

Trampoline consists of

- Jumping mat made of very durable elements (lamellas) with a non-slip surface in the form of alternating horizontal and circular protrusions, strung on stainless steel cable in a flexible cover,
- Elements of the mat (lamellas) with thickenings at the ends (sleeves) - reinforcements against abrasion by the cable, ribs reinforcement, as well as a widened upper surface in the shape of letter "V" which prevents small objects from falling into the trampoline, like for example keys or mobile phones,
- Springs fixing the mat, which are located around the perimeter of the structure - each spring is connected to one metal cord with a special reinforced eyelet (thimble) or a metal rod connecting the mat elements, which prevents the cables from abrasion during their use,
- Rubber collar - flexible cover covering the upper part of the device,
- Metal box structure.

Technical details

- Dimension of trampoline: 2,0 m
- Dimension of jumping mat: 1,5 m
- Safety zone: 5,5 x 5,5 m
- Width of the lamellas: min. 37 mm
- Width of the gaps between lamellas: up to 7 mm
- Free fall height: 0,90 m
- Number of users: 1
- Foundation depth: - 0,40 m
- A certificate confirming compatibility with norm EN 1176
- Differences in dimensions no more than +/- 5% are acceptable

Materials

- The jumping mat is made of very durable V-shaped polyamide elements (lamellas), with a non-slip surface in the form of alternating horizontal and round protrusions,
- The lamellas are strung on stainless steel cables in a flexible cover,
- Rubber collar covering upper part of the device, made of rubber granules and polyurethane glue,
- Galvanized metal box.

All images are for illustration purpose only and may vary from the actual product.

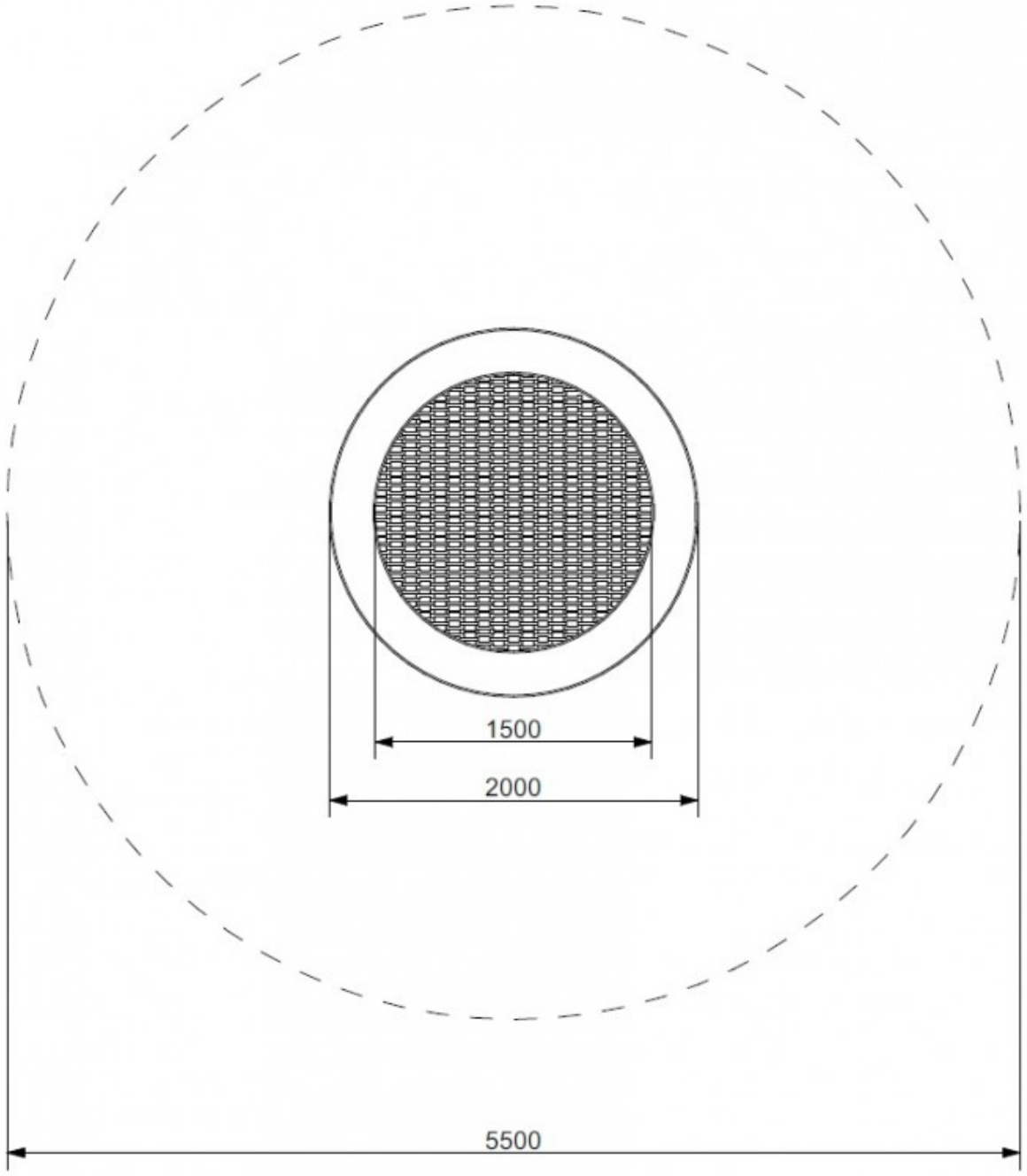
1500
2000
5500