MERCURY

Code: IS-IN-302





Physical



Social-emotional



Swinging



accessibility



Integration

Description

Pendulum swing equipped with seat for disabled users (so called semi-reclining seat). Frame of the swing is made of galvanized and powder painted steel. All screws and other fixing elements are covered with plastic caps.

The seat is available in different colors depending on availability.

Product details

- Dimensions (LxWxH): 2,65 x 1,84 x 2,29m
- Safety zone: 1,75 x 7,35m
- Free fall height 1,34m
- A certificate confirming compatibility with norm EN 1176

Playground device consists of

- frame based on two legs
- 1 x seat for disabled users

Materials

- Structure made of galvanized and powder painted steel.
- Seat for disabled users made of HDPE, moulded and equipped with shock-absorbing bumper,
- Green decors are made of HDPE.

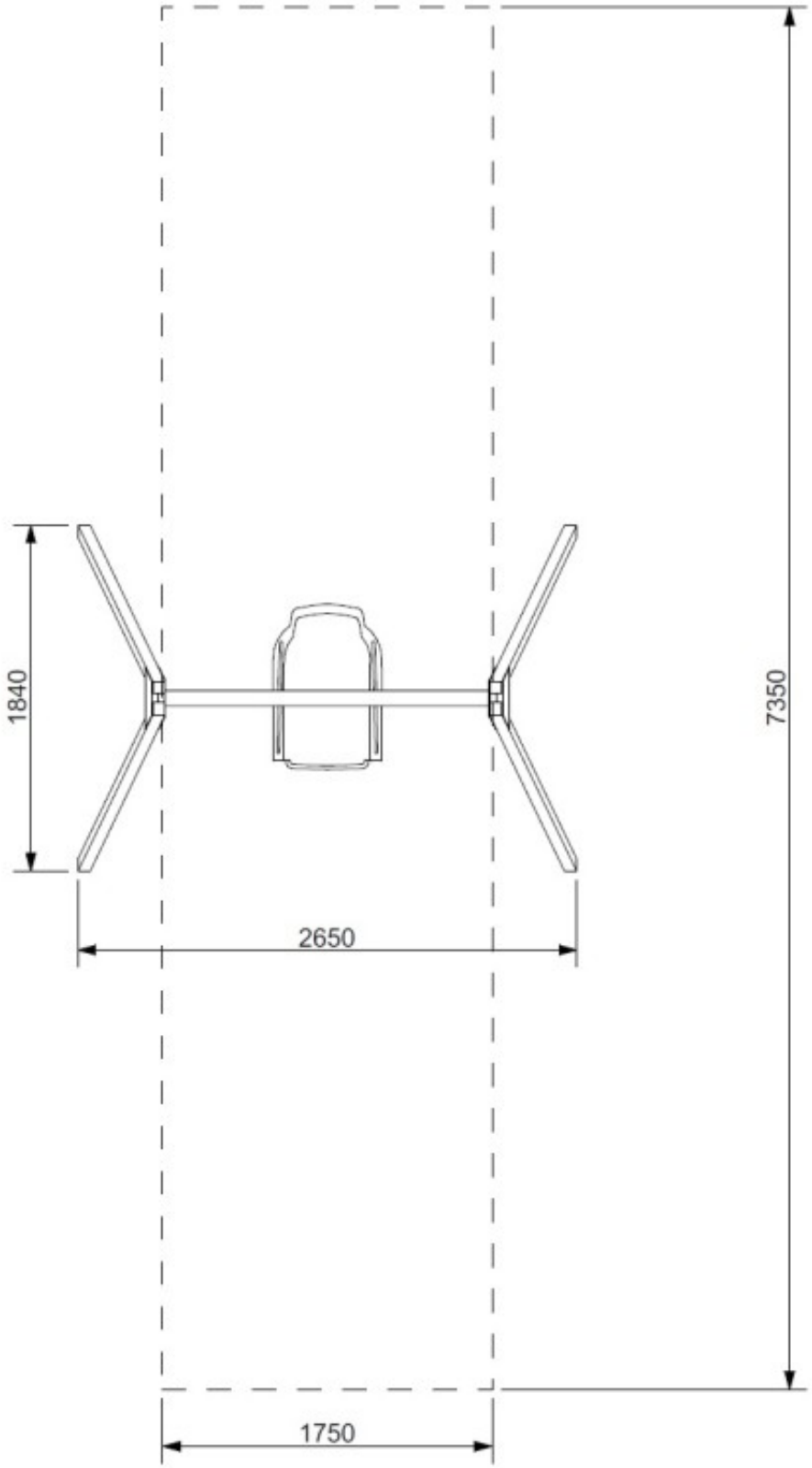
1840
2650
7350
1750