GLITI H2750

Code: LL-MO-005

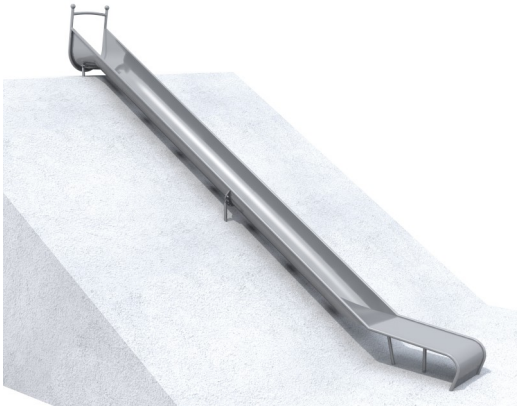



Physical



Sliding down



Social-emotional



Socialisation

Description

The **GLITI H2750 narrow embankment slide** is a timeless playground element that provides children with dynamic and safe play. Its gently contoured sliding surface and stable construction make it an excellent choice for any recreational space — both in parks and residential areas. High-quality craftsmanship ensures durability, safety, and long-term use. The slide is designed for installation on an embankment, allowing it to be naturally and aesthetically integrated into the playground environment.

The **GLITI H2750 narrow embankment slide** consists of a straight trough-shaped slide enabling a safe descent. The structure is supported by six foundation legs made of stainless steel, ensuring high strength, complete corrosion resistance, as well as stability and durability of the entire unit. The slide is made entirely of stainless steel AISI 304 (1.4301), with a sheet thickness of 2 mm and a 33.7 × 2 mm profile; the surface is bead-blasted, weather-resistant, and easy to maintain. The upper part of the slide is equipped with a handrail that facilitates entry and provides additional safety during the start.

Playground device consists of

- 1 straight slide
- 6 foundation legs

Product details

- Dimensions (L×W×H): 5,43 x 0,6 x 3,63 m
- Safety area (L×W): 8,93 x 3,6 m
- Maximum fall height: 0,34 m
- Embankment height (L1): 2350-2750 mm
- Embankment length (L2): 4918 mm

- Embankment width (L3): 4077 mm
- Age: 2+
- Number of users: 2
- A certificate confirming compatibility with norm EN 1176
- Differences in dimensions no more than +/- 5% are acceptable

Materials

- Polished slide made entirely of stainless steel AISI 304 (1.4301) with a sheet thickness of 2 mm and a profile of 33.7 × 2 mm
- Foundation legs made of stainless stee

All images are for illustrative purposes only and may vary from the actual product.

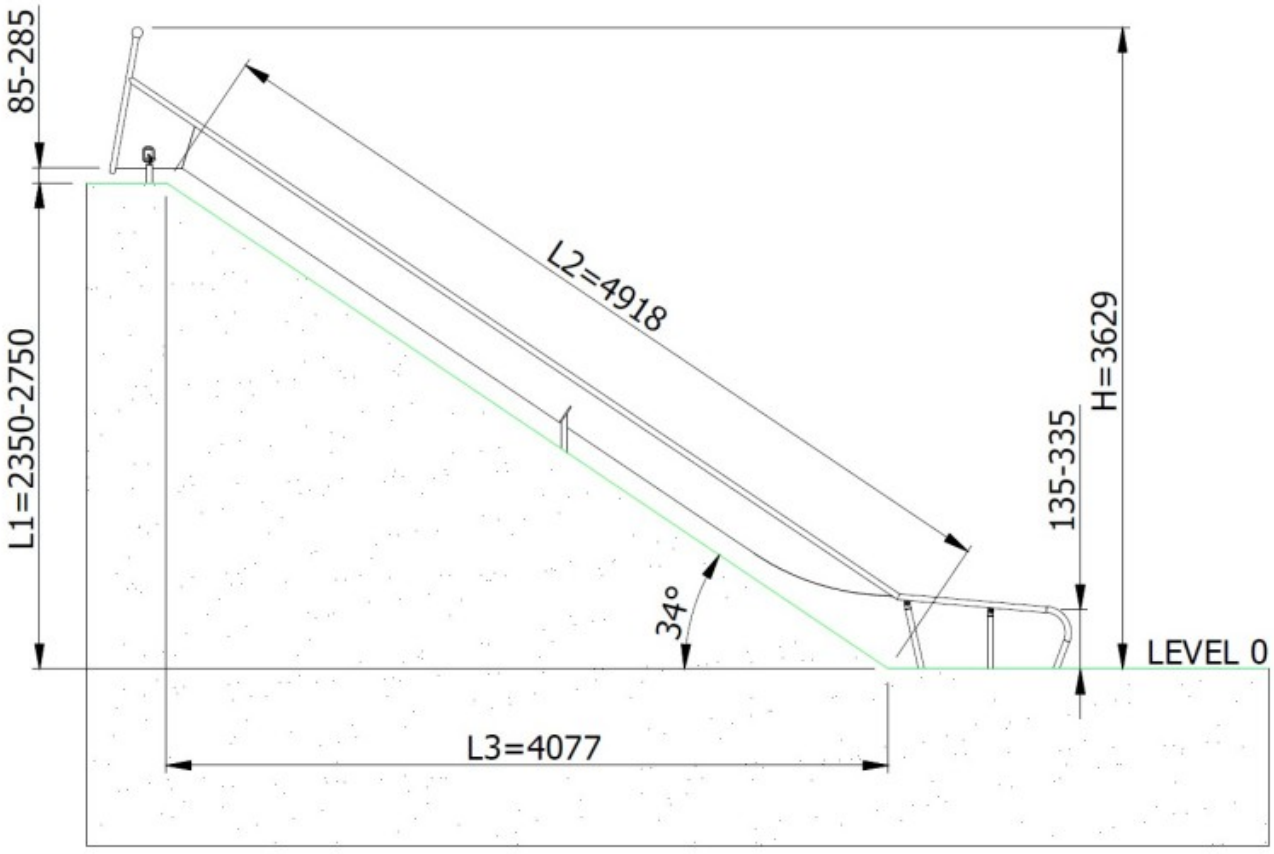
85-285
L1=2350-2750
L2=4918
H=3629
135-335
34°
LEVEL 0
L3=4077